TC62D Installation Instructions

January 2007

This TC62D has a return water low temperature limit option. Using the low limit precludes using a room sensor because both sensors plug into the same port. The return low limit sensor is included with the TC62D.

The room temperature sensor is optional and is not included.

The TC62D may be used as a single input (constant temperature) controller to control the temperature in swimming pools storage tanks and similar applications. This requires that the outdoor sensor be replaced by a calibrated plug. The plug is optional and is not included with the TC62D. Do not use a room temperature sensor in this mode.

If this TC62D (VSE-2) is a replacement for or an upgrade to an older TC62 (VSE-1) or an older TC62D, the original supply and outdoor temperature sensors may be reused if they are still good. When the sensors are plugged in the controller displays an error message if they are defective. Also, the temperatures can be checked on the display.

The ESBE 3-way & 4-way valves may be installed with either clockwise or counterclockwise rotation causing an increase in heat. The controller can be programmed to turn in either direction on an increased demand for heat.

Do not remove the cover from the controller.

Determine valve rotation

You need to know which way the valve turns for more heat to program the TC62D rotation (line E).

Valve rotation for 3-way valves

Open the valve halfway. The pointer on the handwheel of 3-way valves points to the closed port as does the flat on the stem when you remove the handwheel. Halfway open is when the pointer on the handwheel points to the screw hole between the inlet from the boiler and the inlet from the system return port. If a 45º turn clockwise puts the pointer on the return inlet then the valve turns clockwise for more heat.

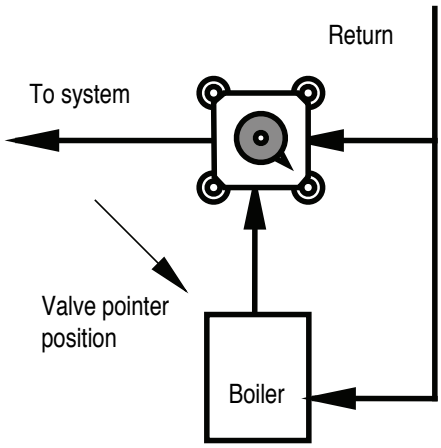

Counterclockwise for more heat

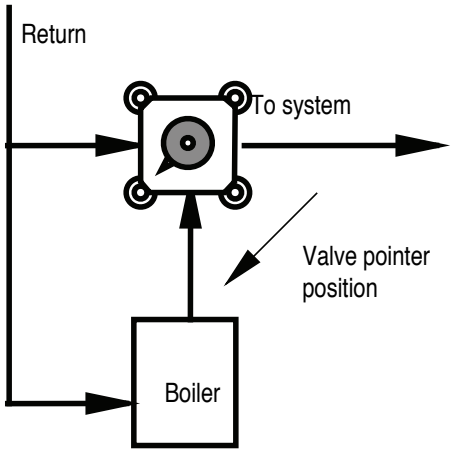

Clockwise for more heat

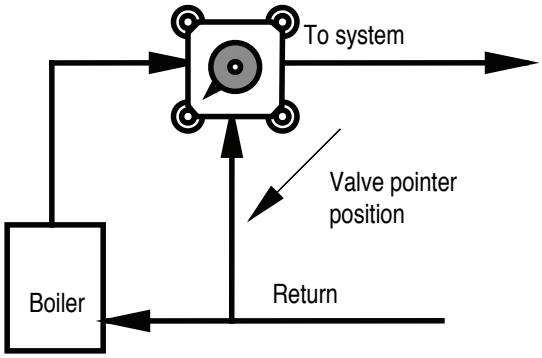

Counterclockwise for more heat

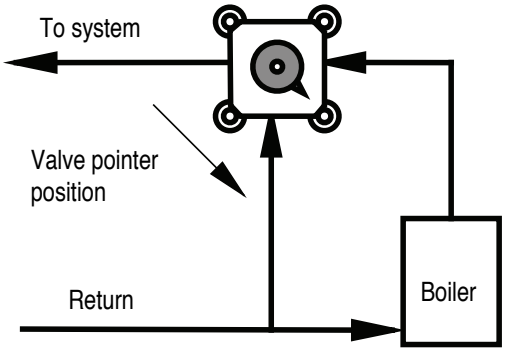

Clockwise for more heat

Valve rotation for 4-way valves

Set the pointer on the handwheel facing the supply line to the heating system (half open). If turning the handwheel clockwise moves it toward the return from the system the valve turns clockwise for more heat.

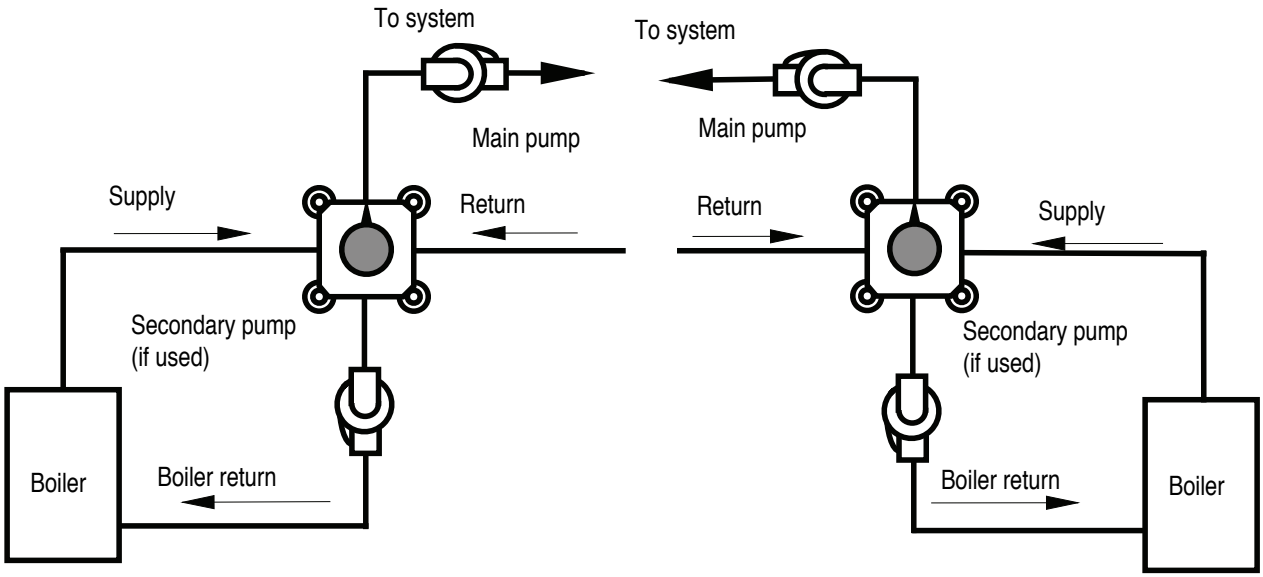

Clockwise for more heat

Counterclockwise for more heat

Actuator Installation

Set the valve half way open and remove the handwheel while keeping the valve half way open.

Push the stem extender (1) onto the valve all the way.

Screw the stop screw (2) into the lower right corner of the valve face.

Make sure the actuator is in the middle. If it is not, push the hand knob in and turn it until the actuator is in the mid position.

Place the actuator over the stem extender and push it into place with the locator pin over the stop screw.

Fasten the controller to the valve with the screw (3) in the center of the handwheel.

Select the red/blue scale (4) so that in the full heat position the widest part of the red band is beneath the pointer. Then, snap the cover (5) onto the handwheel.

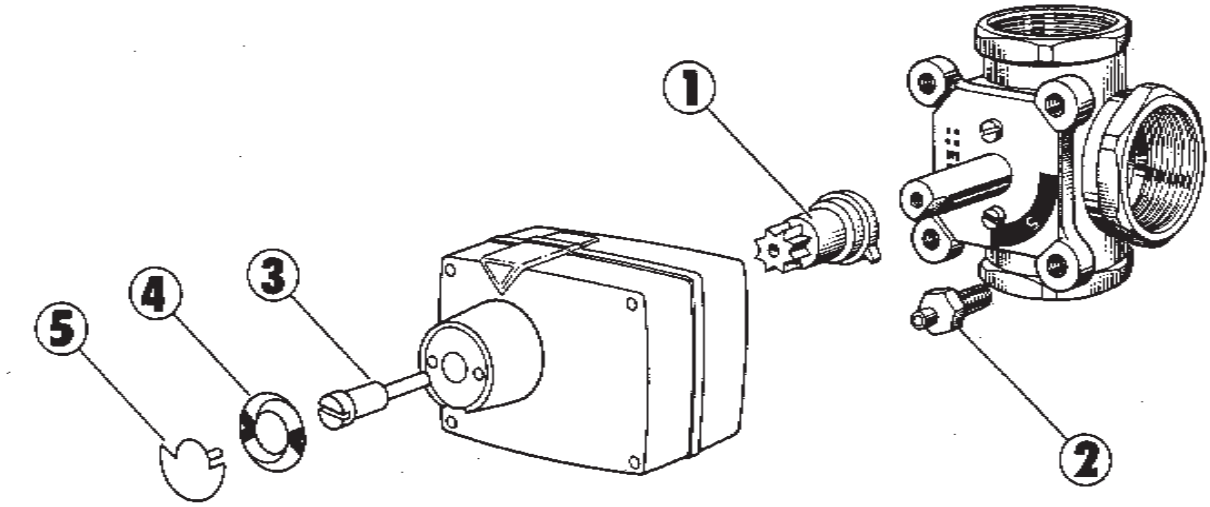

Wiring

Power Wiring

The controller should be powered at all times. It must not be powered in parallel with the burner and/or circulator.

Connect the open end of the power cable to a 24 volt transformer. Plug the other end into the jack labeled “24 VAC”.

The temperature sensors do not need to be shielded. If the code or specifications require them to be installed in conduit, do not put other wiring in the same conduit as the sensor, not even the 24 volt AC power wiring to the TC62D.

Three sensors are included with the TC62D. Each is attached to a cable which plugs directly into the TC62D.

The sensors are electrically identical. The one with the longest cable, (about 50 feet) is the outdoor sensor and the one with the shortest cable is for the supply water.

Outdoor Sensor

Find a location for the outdoor sensor on a north wall, if possible. Avoid exposure to direct sunlight or sources of heat such as dryer vents. Drill a 3/8” (10 mm) hole through the wall, push the sensor through from the inside, fasten it to the wall and then run the cable back to the controller. Coil up any excess cable and plug it into the jack labeled “OUTDOOR” or with this symbol:

If you are using the TC 62D as a single input controller, insert the calibrated plug into the jack for the Outdoor Sensor and discard the sensor.

Supply Water Sensor

Install the supply water temperature sensor at least 18” (50 cm) from the valve preferably on the top of the pipe in a horizontal run. Make sure the pipe is clean and strap the sensor securely and tightly to the pipe. Insulate over the sensor for at least 6 inches (15 cm) in both directions from the sensor. Coil up any excess cable and plug it into the jack labeled “PIPE” or with this symbol:

Return Water Sensor (Optional) Set P=2 if this sensor is used

The return water sensor does not work in all applications. Please see pages 6 & 7 for the working requirements.

If you use the return water sensor install it about 8 inches from the boiler return water inlet and insulate at least 6 inches from it in both directions. Do not cut the cable. Coil up any excess cable and plug the jack into the controller. The port is marked “com”.

If you want to install a low limit in an existing TC62D, verify that it will work. Pull the power plug and plug it back in. The screen should display “P03” and then “1.21” or higher. If the display is “1.13” the controller will not accept a return water low limit.

Room Sensor (Optional) Set P=1 if this sensor is used

A room sensor is not included with the TC62D. When you use one plug it in place of the return water low limit. If you choose to add a room sensor later, check the type of input jack for the sensor.

Programming

For most systems, the default settings work fine. Let the system stabilize for a few days before making changes.

There are four programming buttons. The pair on the left (arrows) are used to scroll through the menu and the pair on the right (- & +) are used to set the values.

The menu has 23 program lines; the first 5, A through E, can be reached simply by pressing the Menu Scroll Buttons; the remaining 18 lines are accessed by pressing both Menu buttons for about 5 seconds and then scrolling with the buttons.

You can scroll forward and backwards through the program lines and can change any value at any time except the temperature scale.

Program settings hold indefinitely; power failures do not cause memory loss. You can completely program the TC62D before you install it. You should have sensors plugged in while you are programming; without the supply and outdoor sensors the screen continuously flashes error messages. You can’t program some room or return sensor functions unless the sensor is plugged in.

The display shows the program line and the value for that line. If the line and its value are more than 3 characters the display alternates between displaying the line and displaying its value.

When you first turn on the TC62D the display flashes some numbers for a few seconds and then stops at the default display value, which is usually line A. The display reads A20 if the scale is in Celsius and A68 if the scale is in Fahrenheit.

The TC62D can be programmed in either Celsius or Fahrenheit, but the scale doesn’t show in the display. If the number in the display isn’t 68 for Fahrenheit or 20 for Celsius, it has been changed. The range is 5º - 30º C or 40º - 90º F So if the displayed setting is 40 or higher the controller is set in Fahrenheit.

Temperature Scales F or C (F is default)

If you want to change, or be certain of the temperature scale, do the following: Press both menu buttons simultaneously and hold them until the display changes. Scroll to either 6 C to change to Celsius or 7 F to change to Fahrenheit and push the Plus button. **Note:** Changing the scale also resets the controller to the default values and any previous settings you changed will be lost.

Press the Menu buttons simultaneously again for about 5 seconds to return to line A or wait about 30 seconds until the TC62D automatically defaults to line A.

Function	Line	Default	Range	
Room Temperature	A	20º C or 68º F	5 - 30º C 40 - 90º F	

If you use a room sensor set this line at the room temperature you want. Adjusting the dial on the room sensor also changes the setpoint. Changes in the room temperature or the room temperature setting displace the reset curve. The amount of displacement is determined by the Room Sensor Authority setting (line t)

If you do not use a room sensor, then line A causes a vertical displacement of the reset curve. A 1º degree change in Line A changes the reset curve about 3º.

Reset Curve	b	40º C or 100º F	22 - 90C	70 - 200º F

This is the supply water temperature at 32º F (0º C) outside and line A set at 68º F. See the chart (last page) for the effect that changing this setting has at other outdoor temperatures. The reset curves have been selected to be especially applicable to most radiant heating systems. There are 6 lines of programming, 8, 9, h, J, L, & n, that allow you to modify the reset curve for particular conditions if the b setting needs adjustment. (See Curve Adjustment, next page) When you change line b, the controller does not immediately change internally; it slowly moves the setpoint to where you want it, taking about 5 minutes to change 10º F.
For single point control this line is the setpoint: set the desired temperature here.

	Line	Default	Range	
Minimum Supply Temperature	C	10º C or 50º F	10 - 90º C	50 - 200º F
Maximum Supply Temperature	d	70º C or 160º F	10 - 90º C	50 - 200º F
Rotation	E	Clockwise to increase supply water temperature		

The indicator spins in the direction the actuator turns to increase heat. To turn counterclockwise to increase heat, press and hold the Minus button until the indicator spins counterclockwise. For clockwise motion use the Plus button.
To adjust the remaining settings press both Menu buttons at the same time and hold them for about 5 seconds.
Menu lines 0, 1, & 2 are indication only. They display temperatures in the scale you selected.

Supply Temperature	0	Displays actual supply water temperature
Calculated Supply Temperature	1	Displays what the supply temperature should be
Outdoor Temperature	2	Displays outdoor temperature; always shows 32 F or 0 C in single point mode

Function	Line	Default	Range
Outdoor Cutoff Temperature	3	17º C or 60º F	0 - 40º C 30 - 99º F

Above this temperature the valve closes to heat; only recirculation occurs in the heating loop. This line will be inactive in single input control (the controller thinks it is always 32º F outside).

Function	Line	Default	Range
Integral Time Amplification	4	5	1 - 10

Lower this value only if the controller hunts (cycles back & forth). Raising it makes the control respond faster, but may also cause hunting. Hunting is a continuous back & forth oscillation in the control. Hunting can also be caused by poor contact between the pipe and the pipe sensor or inadequate insulation around the sensor.

Default Menu Row	5	A	A

This is the permanent display whenever the controller isn't being programmed. When you finish making adjustments, the display reverts to this line in about 30 seconds. Line A shows the room temperature setpoint. Another line may inserted in place of A such as line 2, the outside temperature, or line 0, the supply water temperature.

Curve Adjustment 8, 9, h, J, L, & n These lines read 0 as default

You can modify the shape of the reset curve you selected in line "b". At each of these outdoor temperature points you may modify the reset curve by +/- 10º C or 20º F. These lines are not used often in outdoor reset and should not be used at all in constant temperature control.

Line	Out. Temp C	Out. Temp F	Line	Out. Temp C	Out Temp F
8	-30	-22	J	0	32
9	-20	-4	L	6	43
h	-10	14	n	12	54

Function	Line	Default	Range	
Return or Room Sensor Function	P	2 or 0	0, 1, or 2	
0	no sensor			
1	Third sensor is in the controlled space.			
2	Third sensor is in the boiler return.			
Return or Room Sensor Display		r		

This is the temperature at the third sensor, room temperature if the sensor is in the controlled space, or the boiler return if the sensor is located there.

Boiler Return Water Low Limit	t	90º F or 30º C	90º - 140º F	30º - 60ºC

This is active only if the third sensor function is set for boiler return low limit. This function can not be used in every installation. Please see the next 2 pages if you want to use it.

Differential	U	5º	1º - 10º (F or C)

The boiler return water temperature must increase by this amount above the value set in "t" before the reset control function takes control.

Room Sensor Authority	t	2º	0º - 3º (F or C)

This is the amount 1 degree change in room temperature will change the supply water temperature in the opposite direction. This function is only active when you use a room sensor and set the third sensor function at 1.

Troubleshooting

If the TC62D doesn't work properly, the problem is usually easy to fix.

Sometimes, when changes are made rapidly, the TC62D does not seem to respond correctly. Disconnect the power for a few seconds and the reconnect it. Your last set of instructions remain in the controller and it should respond correctly.

Check to make sure the voltage is correct; it must be 24 volts AC ±10%. If the control transformer powers other devices the voltage may be drawn down below the acceptable limit.

Make sure the sensors are plugged into the correct jack and that Line P is set to the correct value.

Double check the valve and actuator assembly. There are no stops in the valve; if the controller is installed in the wrong position the valve may go past the closed position and begin to open.

Check the rotation. If the TC62 is programmed with the wrong rotation the valve will be driven to one end position or the other and will stay there.

The screen can display 7 error codes and, in most cases, the controller takes a specific action when the error occurs:

ERR 1	Outside temperature sensor is shorted.	The controller assumes it is 32º F outside.
ERR 2	Outside sensor is open or not connected	The controller assumes it is 32º F outside.
ERR 3	Supply water temperature sensor is shorted.	The controller drives the valve half open.
ERR 4	Supply water sensor is open or not connected.	The controller drives the valve half open.
ERR 5	The room or return temperature sensor is shorted.	The controller functions without the sensor.
ERR 6	The room or return sensor is out of range.	The controller functions without the sensor.
ERR 7	There is an internal problem.	No controller action; replace it.

Using the Return water Low Limit Function

4-way Valves

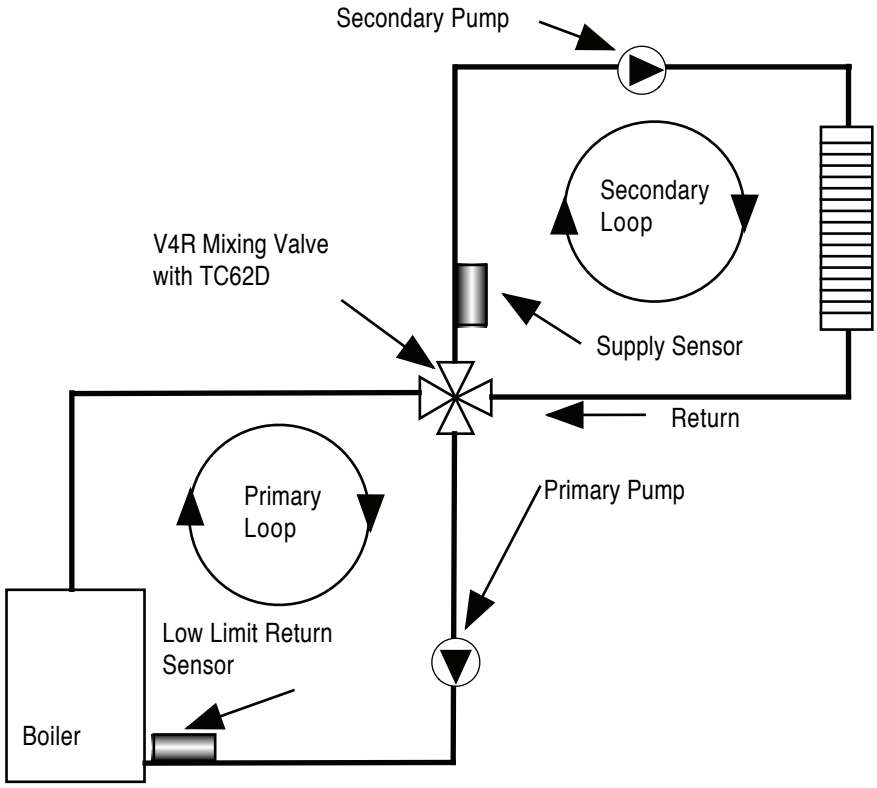

Below the setting of the boiler water return low limit there will be 100% recirculation in the primary loop (and the secondary loop). When the temperature rises above the setting + the differential setting the TC62D then works as a reset controller.
If there is no pump in the primary loop or it isn't running, then the only circulation in the primary loop will be by gravity and the temperature in the boiler return will take a long time, if ever, to rise high enough for the reset function to take over.

3-way Valves

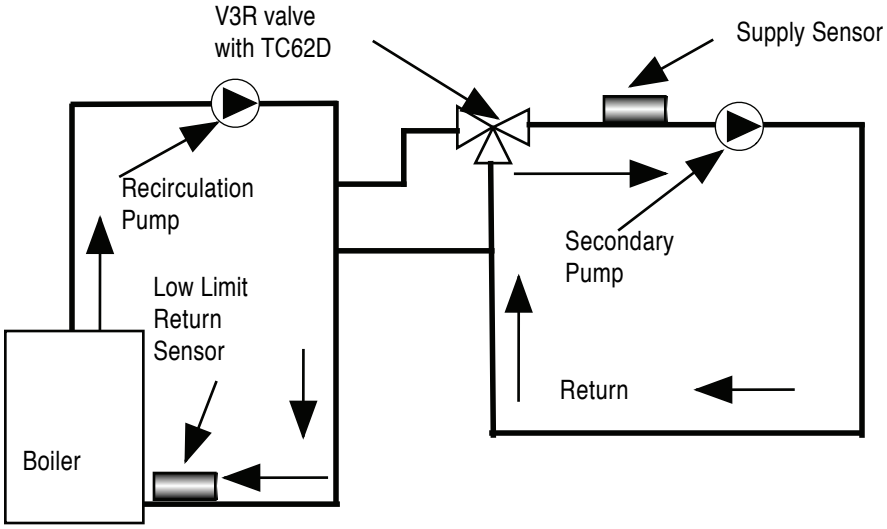

If if there is no recirculation pump or it isn't running, the temperature in the boiler return may not rise high enough for the TC62D to work as a reset controller. Also, if there is not enough flow through the recirculation line, the boiler return temperature may not be high enough for the reset function to take over.

Programming

Set Line P at 2
Set Line t at desired low limit (90º F - 140ºF)
Set line U at desired differential (1º - 10º)
Below t the TC62D controls from the low limit sensor.
When the temperature at the low limit sensor is above t + U the TC62D is a reset controller that works from the temperature at the supply sensor and the outdoor temperature.

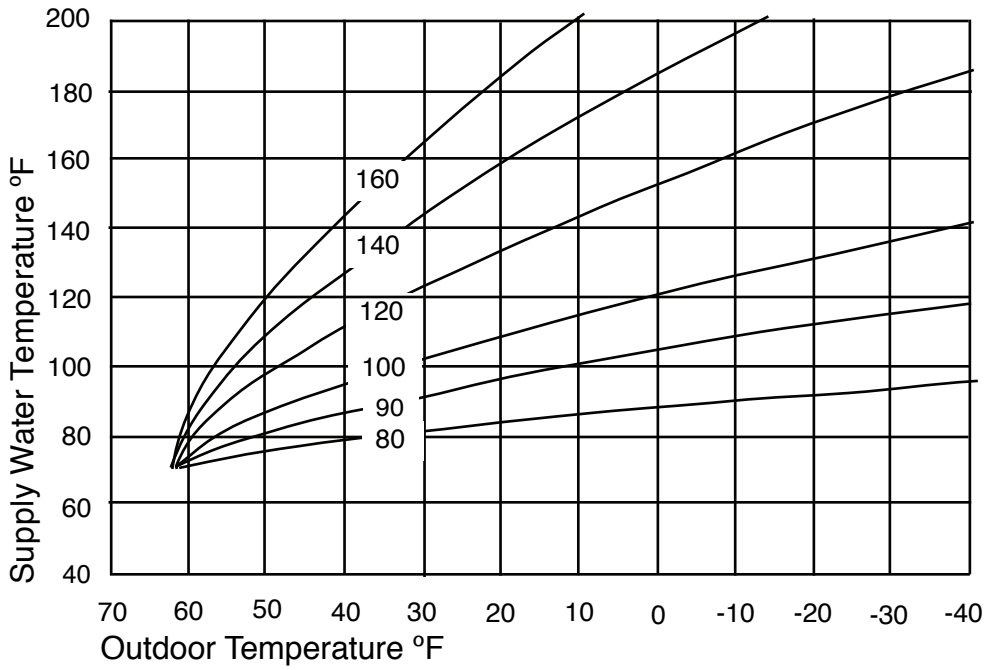

The reset curve shown at 100º F is the default value. If you set b at 110º, the controller follows a reset curve between the samples at 100º and 120º.

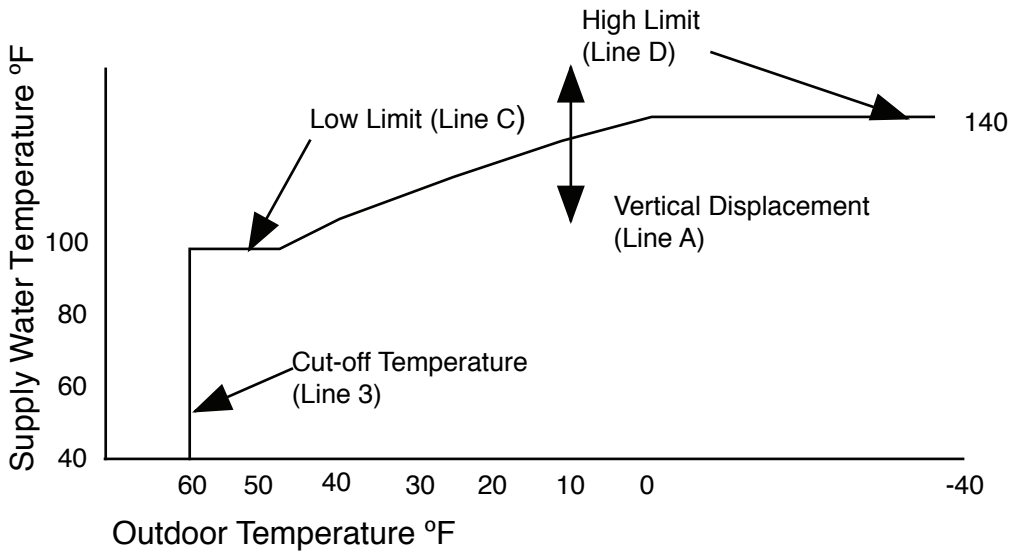

A sample reset curve with high limit, low limit and cut-off settings applied

Programming Summary

Program lines A, b, C D, & E are set by scrolling to them with the Arrow keys and adjusting them with the + & - keys. The remaining programming lines are set by first holding both Arrow keys for 5 - 10 seconds and then scrolling through them as with lines A - E.

Valve Rotation	E	
Valve turns clockwise for more heat	+	
Valve turns counterclockwise for more heat	-	
Room Temperature Setting		
Activate Room Temperature Control	P	Set line P to 1
Room Temperature Setpoint	A	
Room Sensor Authority	t	
Reset Curve		
Curve Selection	b	
Minimum Supply Water Temperature	C	
Maximum Supply WaterTermperature	D	
Outdoor Cut-off Temperature	3	
Vertical Curve Displacement	A	
Redraw Reset Curve		8, 9, h, J, L, & n
Displays		
Actual Supply Water Temperature	0	
Correct Supply Water Temperature	1	
Outdoor Temperature	2	
Return or Room Temperature (if used)	r	
Set the Default Menu Display	5	
Return Water Low Limit		
Activate Return Low Limit	P	Set line P to 2
Low Limit Setpoint	t	
Differential	U	
Reset the TC62D		
Return the control to factory settings		
Fahrenheit	7	+
Celsius	6	+

Temperature Vs. Resistance For TC62 Sensors

Resistance is in 1000's of ohms.

All the sensors have the same curve.

Temperature		Resistance	Temperature		Resistance	Temperature		Resistance
C	F	KΩ	C	F	KΩ	C	F	KΩ
-30	-22	314.8	15	59	33.0	55	131	7.1
-25	-13	237.8	20	68	27.1	60	140	6.0
-20	-4	181.2	25	77	22.0	65	149	5.0
-15	5	139.2	30	86	18.0	70	158	4.3
-10	14	107.8	35	95	14.8	75	167	3.7
-5	23	84.2	40	104	12.2	80	176	3.1
0	32	66.2	45	113	10.1	85	185	2.7
5	41	52.4	50	122	8.6	90	194	2.3
10	50	41.8						